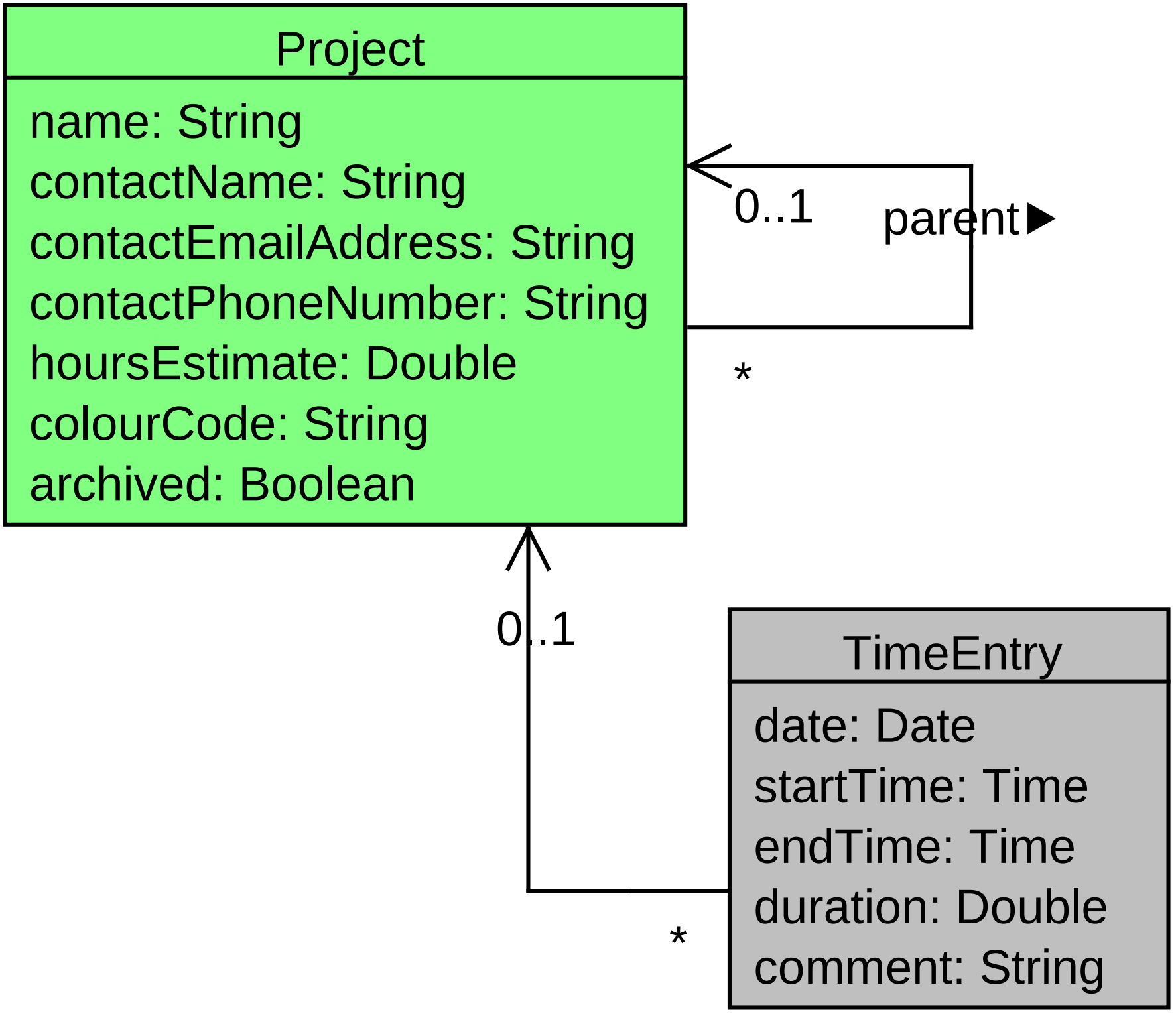
Project
name: String
contactName: String
contactEmailAddress: String
contactPhoneNumber: String
hoursEstimate: Double
colourCode: String
archived: Boolean
0..1
parent ▶
*
0..1
*
TimeEntry
date: Date
startTime: Time
endTime: Time
duration: Double
comment: String